8:4 SV/CV/Audio Matrix Switcher

S-Video(Y/C) / Composite Video / Stereo Audio Matrix Switcher + IR Remote Control + Rs232

SB-5560

SB-5560MRM

SB-5560 is a high speed 300MHz Video Bandwidth Matrix routing switcher. SB-5560 is one of the most innovative S-Video(Y/C)/ Composite Video/Stereo Audio switching products on the market Today. The SB-5560 support the Ear mount and SB-5560MRM for Rack mount type. It has 8 individual inputs with 4 individual outputs. Because it is a matrix router, any input may be routed to any output; or the same input may be routed to all outputs or any combination. It completely eliminates the need to constantly move around audio and video input and output cables. The SB-5560 matrix switcher is ideally suited for High Definition Television applications. Control is provided via Front pushbuttons with LED readout or IR remote controller. A RS 232 interface is provided for interfacing with third party control. A Windows-basedcontrol software package is included to provide complete control of the SB-5560 from a PC.

Key Features

- Support 8 inputs to 4 outputs Matrix Switcher
- Group input / output included
  1. S-Video (Y/C)
  2. Composite Video
  3. Audio : Stereo Audio (AR/AL)
- Support RS 232 interface control driver for 95/98/2000/xp
- Infrared : IR remote control
- Video Bandwidth : 300MHz
- Refresh : for HDTV 408p, 576p, 720p, 1080i60, 1080p60
- Scan rates accepted : 50Hz or 60Hz
- Enclosure type : Support 19 inch Ear/Rack mountable
- Support Lower power consumed full load under 500mA
- RS 232 protocol list with manual attached

Specifications

Type of switcher	8 inputs To 4 outputs Matrix Switcher
Outputs swings	< 25mV
Video Bandwidth	300MHz,
Slew Rate	750 V/μs
Settling Time	9 ns to 0.5%
Gain flatness	0.1 dB to 65MHz, RL=150Ω
	0.02% differential gain error; RL=1 KΩ
	0.03% differential phase error; RL=1 KΩ
Low distortion	-80 dB total harmonic @ 1 Mhz; RL=100Ω
Audio Frequency Respond	20Hz ~20KHz, ± 0.05db.
Terminals in / out	S-Video (Y/C) : Mini-din 4 pin female socket
	Composite Video : RCA connectors (Color Yellow)
	Stereo Audio : RCA connectors (Color Red/White)
Low power	5.3 mA / Amplifier
Dimensions (W.D.H.)	17.32" (W) x 7.80" (D) x 1.73" (H)
Net Weight (Unit Only)	About 2720 gwm (with metal case)
Power Voltage Input	DC 12V @500mA, ~3A accepted

Installing

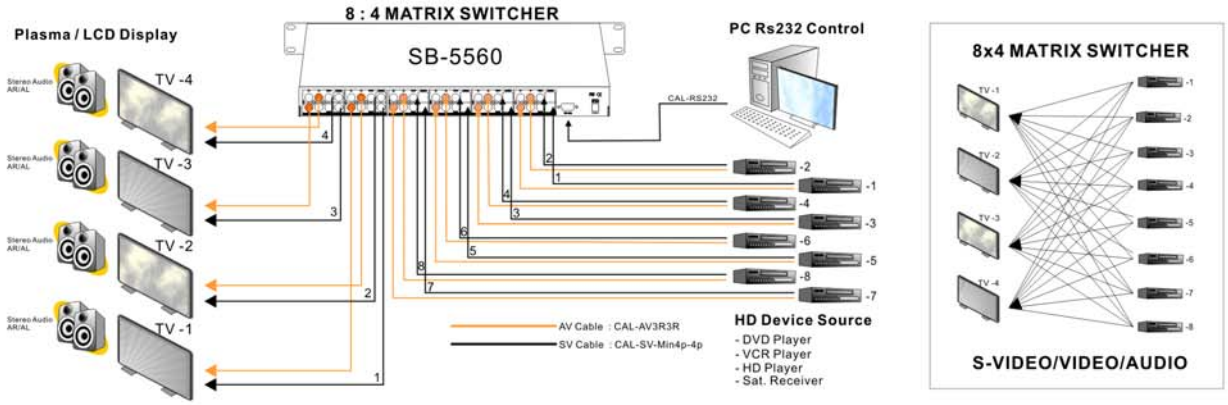

Order Information

Item Number	Accessories (Packaged)	Part Number	Accessories (non - Packaged)
• SB-5560	8:4 Composite/St-Audio Matrix Switcher	• CAL-A2R2R	AV Cable: 3RCA-3RCA Male (Yellow)
• SB-5560MRM	19 inch Rack mount	CAL-SV-Min4p-4p	SV Cable: Min-din 4P-Min-din 4P(Black)
• MPA-SW12V1200MA	Switch Adaptor : 12VDC,@500mA.		
• CAL-RS232	RS 232 Cable		
• EAR-L440	Ear Mount unit for L=440mm		